MEM Bath cascade spout without diverter for deck mounting - Dark Chrome

MEM

13 630 740

- 235mm projection
- cascade
- height of mixer 100 mm
- height up to aerator 80 mm
- hole diameter 32 mm
- 1/2" connection
- max. flow 26.5 l/min at 3 bar flow pressure
- WRAS

Dark Chrome	13 630 740-19
Chrome	13 630 740-00
Brushed Platinum	13 630 740-06
Platinum	13 630 740-08
Brushed Durabrass (23kt Gold)	13 630 740-28
Brushed Champagne (22kt Gold)	13 630 740-46
Champagne (22kt Gold)	13 630 740-47
Brushed Dark Platinum	13 630 740-99

We reserve the right to change designs, product range and technical specifications without prior notice.
More information can be found at: www.dornbracht.com +49 (0) 2371 8899 900 mail@dornbracht.com

MEM Bath cascade spout without diverter for deck mounting - Dark Chrome

MEM

13 630 740

mm [inches]

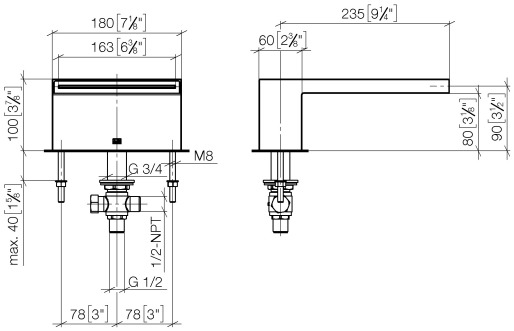

Flow rate chart

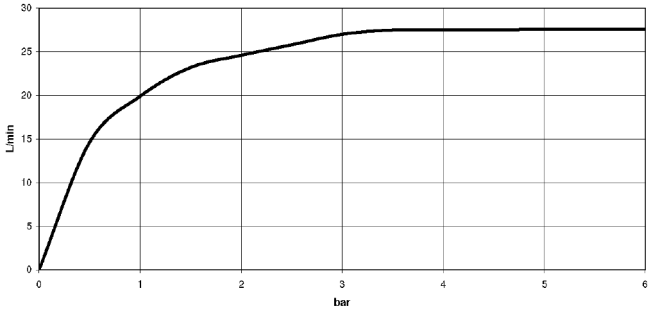

Trajectory diagram

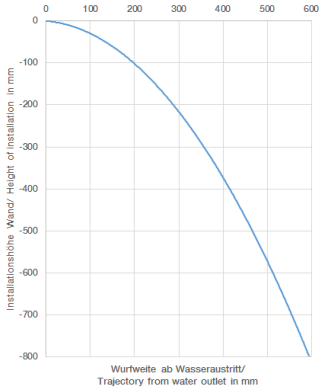

Codes & Standards

DIN 4109	ISO 3822	Scottish Water Byelaws	UK Water Supply Regulations

Ü-Zeichen

MEM Bath cascade spout without diverter for deck mounting - Dark Chrome

MEM

13 630 740

Certificates

LGA_19	WRAS_240502

MEM Bath cascade spout without diverter for deck mounting - Dark Chrome

13 630 740
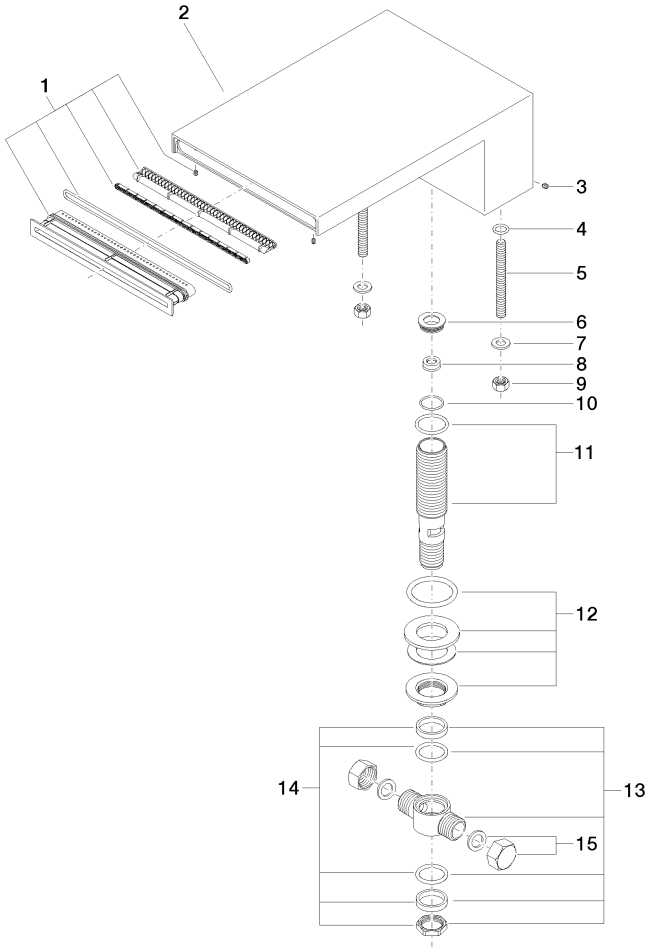
Parts for other finishes can be found here: Chrome